REV.	DESCRIPTION	DATE
A	NEW DRAWING	11/10/2005
B	corrected spec error	10/29/2007

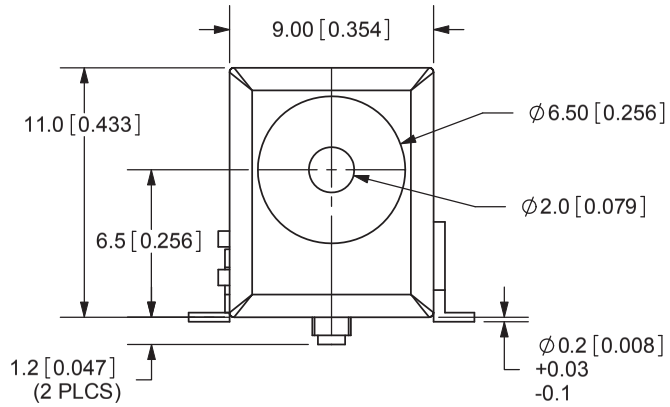

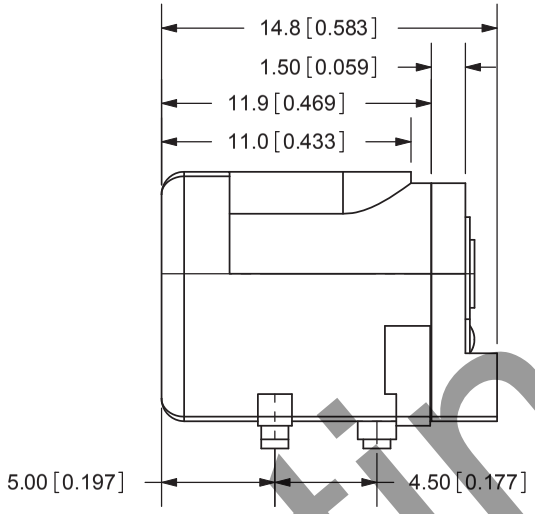

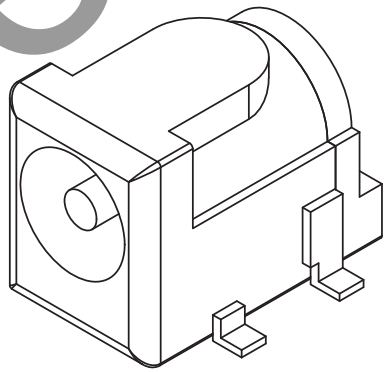

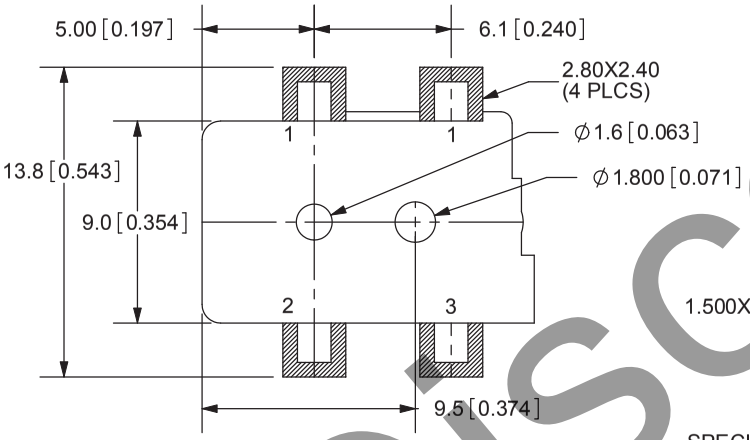

PCB LAYOUT
TOP VIEW

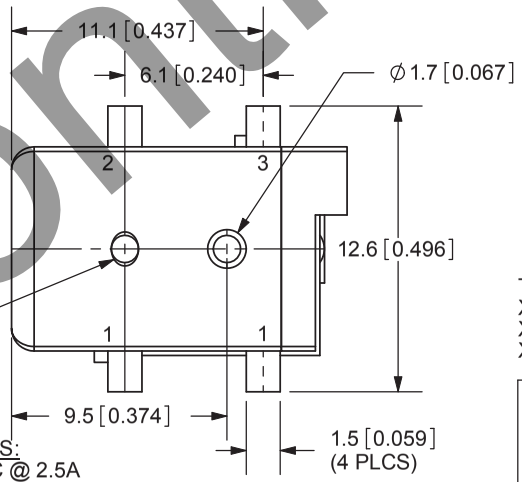

TOLERANCE:
X.X ±0.2mm
X.XX ±0.1mm
X.XXX ±0.05mm

SPECIFICATIONS:
RATING: 16V DC @ 2.5A
CONTACT RESISTANCE: 30m OHMS MAX
INSULATION RESISTANCE: 50M OHMS MIN: 500V DC
VOLTAGE WITHSTAND: 500V AC R.M.S. FOR 1 MINUTE
LIFE: 5,000 CYCLES
OPERATING TEMP: -25° ~ +85°C

MODEL NO.	PJ-002A-SMT
SCHEMATIC	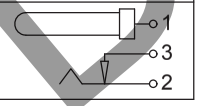

CENTER PIN DIAMETER 2.0mm Dia.

	MATERIAL	PLATING
CENTER PIN	Copper	Nickel
TERMINAL 1	Brass	Silver
TERMINAL 2	Copper Alloy	Silver
TERMINAL 3	Brass	Silver
HOUSING	PA6T	

CUI INC
20050 SW 112th Ave.
Tualatin, OR 97062
Phone: 503-612-2300
800-275-4899
Fax: 503-612-2383
Website: www.cui.com

TITLE: 2.0mm SURFACE MOUNT POWER JACK
REV: A
PART NO. PJ-002A-SMT
UNITS: MM [INCHES]
DRAWN BY: ZRJ
APPROVED BY:
SCALE: 2:1

PC FILE NAME: PJ-002A-SMT

COPYRIGHT 2007 BY CUI INC.

B

Discontinued

For more information, please visit the product page | For information on related products, view External Power Supplies