© 2016 AFCI

Amphenol FCi

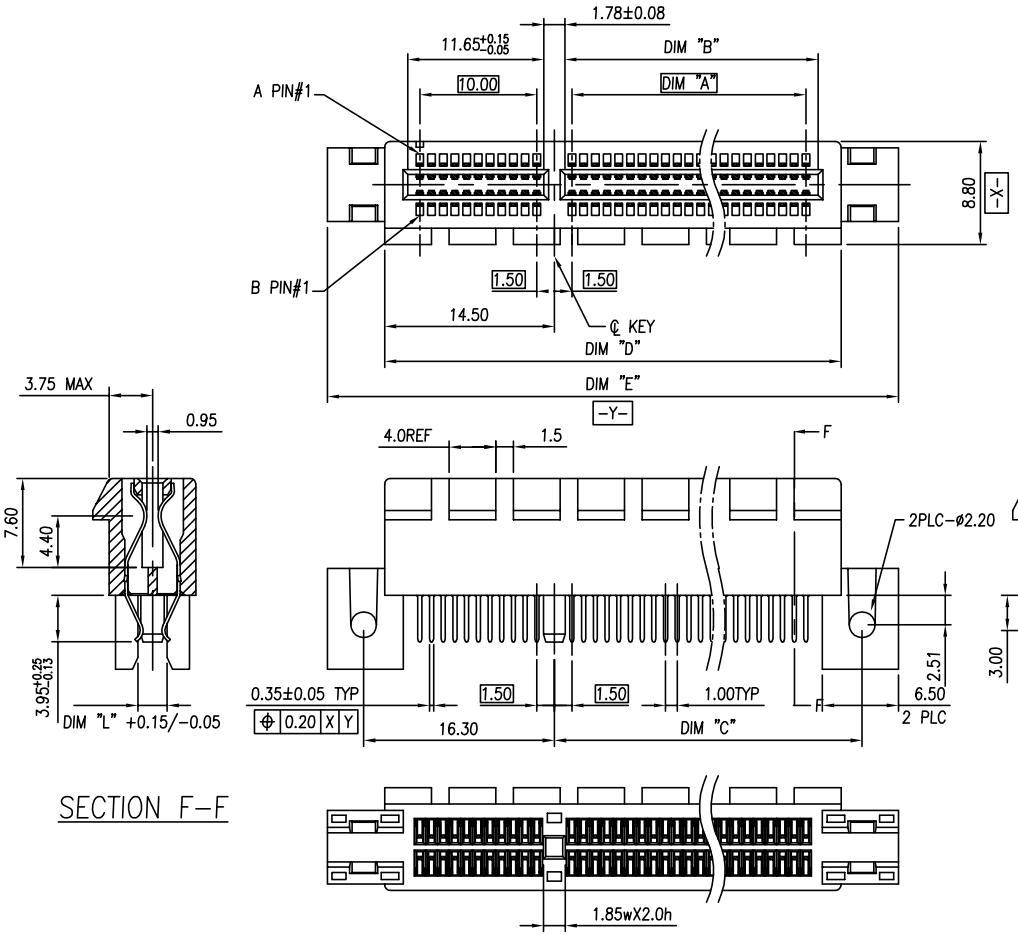

NOTES:

1. MATERIAL:
   1.1 HOUSING: THERMOPLASTIC, HIGH TEMP., UL94V−0;
   1.2. CONTACTS: COPPER ALLOY.
2. CONTACT FINISH:
   SELECTED GOLD PLATING ON CONTACT AREA.
3. NO TIE BAR PERMITTED FROM CARD EDGE TO LEADING EDGE OF PAD FOR PINS A1 AND PIN No. "F"
4. CHAMFER EDGES MUST BE FREE OF CUTTING EDGE.
5. FREQUENCY & LOCATION AT SUPPLIER DISCRETION. RIDGE MAY BE CONTINUOUS WITH NO BREAKS.
6. PRODUCT SPEC.: GS−12−233
   PACKING SPEC: GS−14−910
7. THE HSG WILL WITHSTAND ESPOSURE TO 260 +/−5C SOLDER BATH TEMP. FOR 5 SEC. IN A REFLOW SOLDER APPLICATION.

PRODUCT NUMBER CODE

10069690 −X 0 X X X X LF

- HOUSING COLOR OPTIONS: 0−NATURAL; 1−BLACK
- RESERVE
- TERMINAL PLATING OPTIONS:
  - 0−50u" Ni UNDERPLATE, 30u" Au CONTACT AREA, 100u" MATT TIN TAIL AREA
  - 1−50u" Ni UNDERPLATE, 15u" Au CONTACT AREA, 100u" MATTE TIN TAIL AREA
  - 2−50u" Ni UNDERPLATE, GOLD FLASH CONTACT AREA, 100u" MATT TIN TAIL AREA
- POS OPTIONS: 0−36; 1−64; 2−98; 3−164
- PCB THICKNESS OPTION: 0− 2.08 MM; 1− 2.30 MM; 2− 1.80 MM △E
- PACKAGING OPTIONS: T:TRAY PACKAGING (ONLY 98P WITH CAP; 36P,64P,164P WITHOUT CAP); P:TRAY PACKAGING WITH CAP (FOR 36P,64P AND 164P ONLY)
- LF — LEAD FREE

DIMENSIONS					
POSITION	A ±0.20	B +0.15 −0.05	C ±0.20	D ±0.23	E ±0.30
36	6	7.65	12.30	25.00	34.8
64	20	21.65	26.30	39.00	48.8
98	37	38.65	43.30	56.00	65.8
164	70	71.65	76.30	89.00	98.8

DIMENSION "K"	DIMENSION "L"	PCB THICKNESS (DIM "J")
1.40	2.50	1.80 MM △E
1.60	2.50	2.08 MM
1.90	2.50	2.30 MM

ltr	ecn no	dr	date
A	T07−1077	S.Lin	03/13/07
B	T07−1098	S.Lin	06/08/07
C	T00−1001	J.H	1/3/08
D	DG−23735	LZH	4/05/16
E	DG−30520	LZH	6/21/18

mat'l. code: −
surface: -
tolerance: ASME_Y14.5
tolerances unless otherwise specified
angles: ±2°
linear: .0±.0.30; .00±.0.20; .000±.0.10
projection
MM
scale N/A

dr	ZHENHUA_LIU	2016−03−25
engr	ZHENHUA_LIU	2016−03−25
chr	STONE_LI	2016−03−25
appd	PM_ZHENG	2016−03−25

sheet index | revision E | sheet

product family: PCI_EXPRESS
title: PCI_EXPRESS_CARD_EDGE_GEN3 STRADDLE_MOUNT_ASS'Y
dwg no 10069690 | sheet 1 of 4 | size A4
type: CUSTOMER Drawing

Amphenol FCi

form: A4mmXLc−2016−02−24

PDS: Rev :E STATUS:Released Printed: Oct 29, 2018

© 2016 AFCI

Amphenol FCi

NOTES:

1. MATERIAL:
   INSERT CAP: THERMOPLASTIC, HIGH TEMP., UL94V-0; BLACK COLOR.
2. THE INSERT CAP SHALL BE REMOVED OUT AFTER RE-FLOWED PROCESS.

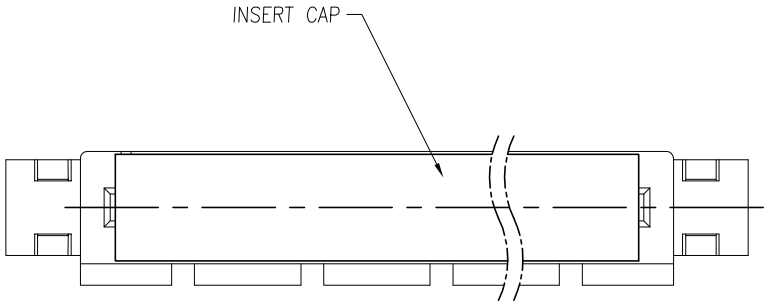

DIMENSIONS		
POSITION	F	G
36	20.4	7.1
64	34.4	21.1
98	51.4	38.1
164	84.4	71.1

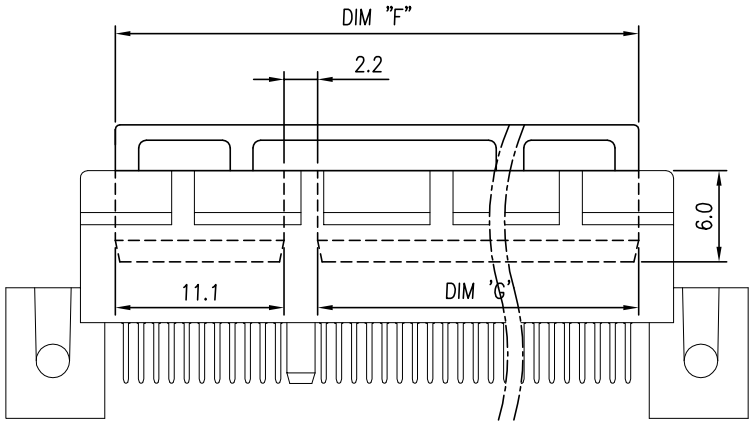

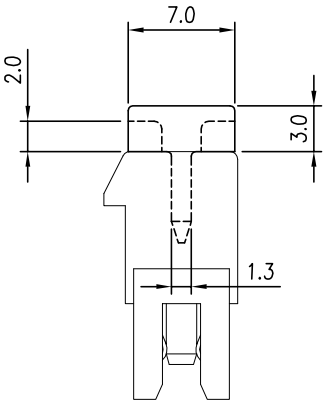

mat'l. code: –				surface: -	tolerance: ASME_Y14.5	projection	product family: PCI_EXPRESS
ltr	ecn no	dr	date	tolerances unless otherwise specified			title: PCI_EXPRESS_CARD_EDGE_GEN3 STRADDLE_MOUNT_ASS'Y
				angles: ±2°	linear: .0±.0.30 / .00±.0.20 / .000±.0.10	MM	
						scale N/A	
				dr: ZHENHUA_LIU	2016-03-25	Amphenol FCi	dwg no: 10069690
				engr: ZHENHUA_LIU	2016-03-25		sheet 2 of 4
				chr: STONE_LI	2016-03-25		size: A4
				appd: PM_ZHENG	2016-03-25		type: CUSTOMER Drawing
sheet index	revision sheet	E					

PDS: Rev :E STATUS:Released Printed: Oct 29, 2018

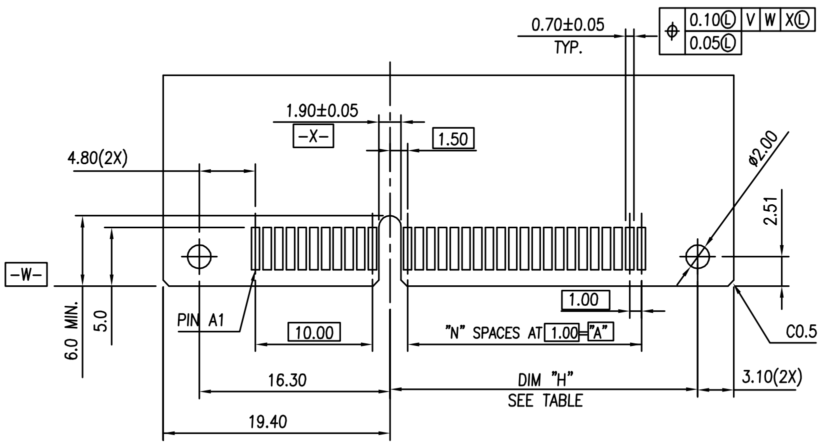

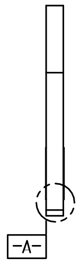

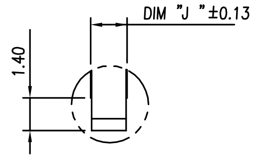

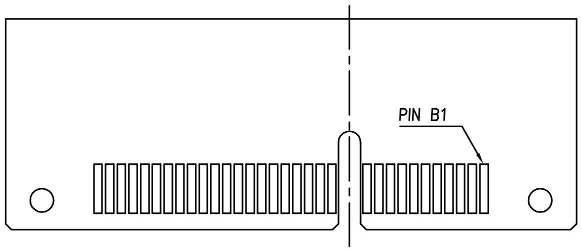

RECOMMEND OF PCB DIMENSIONS

REFLOW DIRECTION

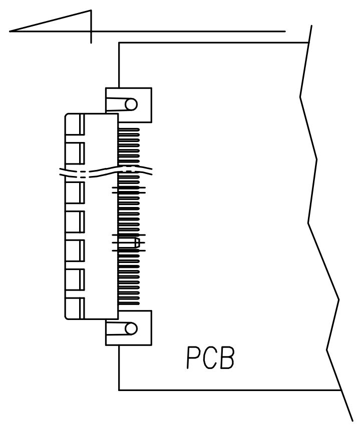

RECOMMEND OF REFLOW DIRECTION

# POS REF.	N	DIM "H"
36	6	12.30
64	20	26.30
98	37	43.30
164	70	76.30

mat'l. code: —	surface: — / tolerance: ASME_Y14.5	projection	product family: PCI_EXPRESS
ltr / ecn no / dr / date	tolerances unless otherwise specified	MM	title: PCI_EXPRESS_CARD_EDGE_GEN3 STRADDLE_MOUNT_ASS'Y
	angles ±2° / linear .0±0.20, .00±0.13, .000±0.05	scale N/A	
	dr ZHENHUA_LIU 2016-03-25	Amphenol FCi	dwg no 10069690 / sheet 3 of 4 / size A4
	engr ZHENHUA_LIU 2016-03-25		
	chr STONE_LI 2016-03-25		
	appd PM_ZHENG 2016-03-25		type CUSTOMER Drawing
sheet index / revision E / sheet			

© 2016 AFCI

Amphenol FCi

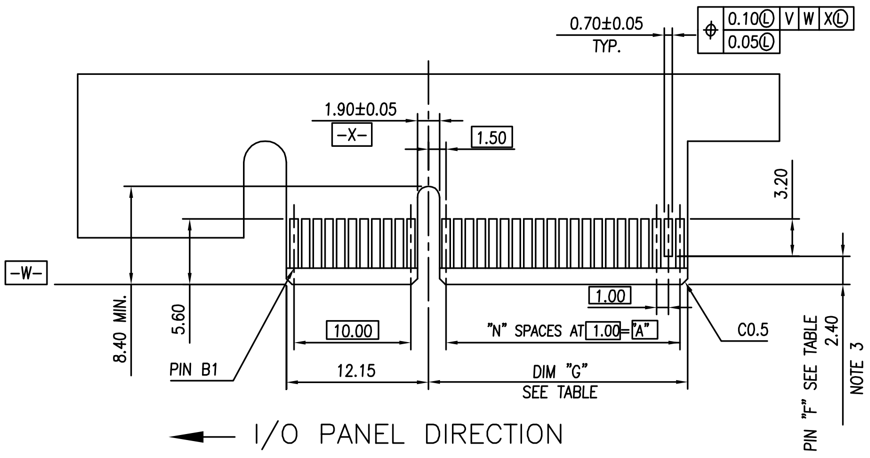

I/O PANEL DIRECTION
PRIMARY (COMPONENT) SIDE

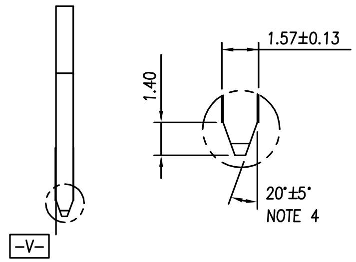

SCALE 2:1

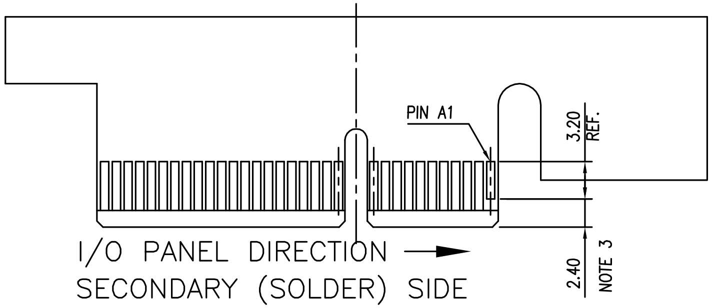

I/O PANEL DIRECTION
SECONDARY (SOLDER) SIDE

ADD-IN CARD EDGE-FINGER DIMENSIONS

# POS REF.	N	DIM "G"±0.20	"F"
36	6	8.15	B17
64	20	22.15	B31
98	37	39.15	B48
164	70	72.15	B81

mat'l. code: —	surface: —	tolerance: ASME_Y14.5	projection
tolerances unless otherwise specified	angles ±2°	linear: .0±0.20; .00±0.13; .000±0.05	MM; scale N/A
dr	ZHENHUA_LIU	2016-03-25	
engr	ZHENHUA_LIU	2016-03-25	
chr	STONE_LI	2016-03-25	
appd	PM_ZHENG	2016-03-25	

ltr	ecn no	dr	date

sheet index | revision E | sheet

Amphenol FCi

product family: PCI_EXPRESS

title: PCI_EXPRESS_CARD_EDGE_GEN3 STRADDLE_MOUNT_ASS'Y

dwg no: 10069690 | sheet 4 of 4 | size A4

type: CUSTOMER Drawing