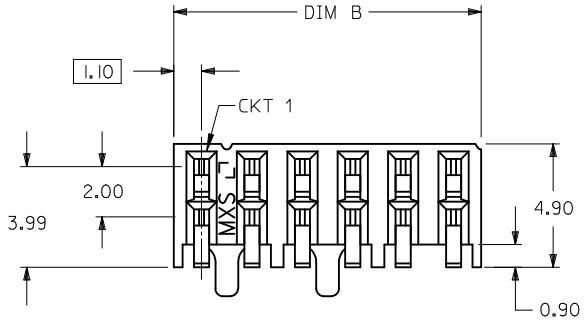

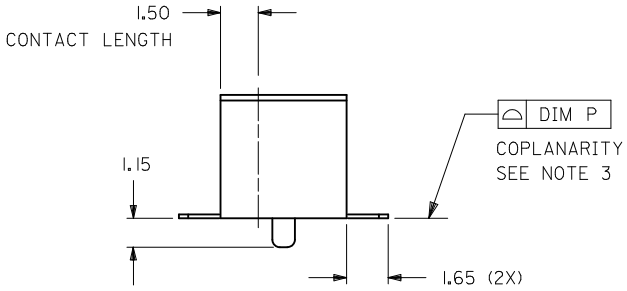

PART NUMBER	CKT. SIZE	DIM A	DIM B	DIM F	DIM P
87368-082*	8	6.00	8.20	4.00	0.10
87368-102*	10	8.00	10.20	4.00	0.10
87368-122*	12	10.00	12.20	4.00	0.13
87368-142*	14	12.00	14.20	6.00	0.13
87368-162*	16	14.00	16.20	8.00	0.13
87368-182*	18	16.00	18.20	10.00	0.13
87368-202*	20	18.00	20.20	12.00	0.13
87368-222*	22	20.00	22.20	14.00	0.13
87368-242*	24	22.00	24.20	16.00	0.15
87368-262*	26	24.00	26.20	18.00	0.15
87368-282*	28	26.00	28.20	20.00	0.15
87368-302*	30	28.00	30.20	22.00	0.15
87368-322*	32	30.00	32.20	24.00	0.15
87368-342*	34	32.00	34.20	26.00	0.15
87368-362*	36	34.00	36.20	28.00	0.15
87368-382*	38	36.00	38.20	30.00	0.15
87368-402*	40	38.00	40.20	32.00	0.15
87368-422*	42	40.00	42.20	34.00	0.15
87368-442*	44	42.00	44.20	36.00	0.15
87368-462*	46	44.00	46.20	38.00	0.15
87368-482*	48	46.00	48.20	40.00	0.15
87368-502*	50	48.00	50.20	42.00	0.15

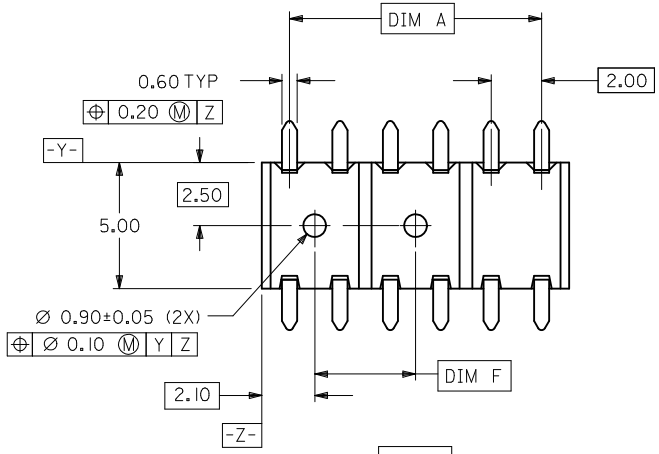

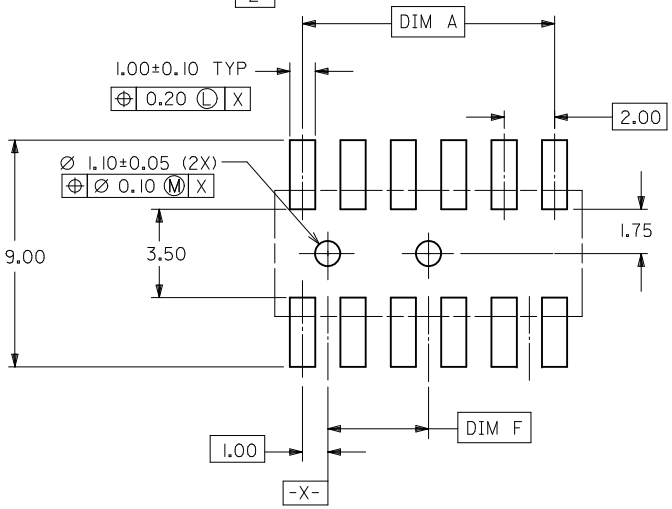

RECOMMENDED P.C. BOARD LAYOUT

NOTE:

1) 12 CIRCUIT SIZE SHOWN FOR ILLUSTRATION ONLY. SEE CHART FOR AVAILABLE PART SIZES.

2) PLATING FINISH:
   - 4 - 0.38um/15uin MIN. GOLD IN CONTACT AREA
     2.54um/100uin MIN. TIN IN SOLDER TAIL AREA
     BOTH OVER 1.27um/50uin MIN. NICKEL OVERALL
   - 5 - 0.76um/30uin MIN. GOLD IN CONTACT AREA
     2.54um/100uin MIN. TIN IN SOLDER TAIL AREA
     BOTH OVER 1.27um/50uin MIN. NICKEL OVERALL
   - 6 - 0.05 TO 0.25um (2 TO 10uin) GOLD IN CONTACT AREA
     2.54um/100uin MIN. TIN IN SOLDER TAIL AREA
     BOTH OVER 1.27um/50uin MIN. NICKEL OVERALL

3) COPLANARITY OF SOLDER TAIL IS TO BE MEASURED BY RESTING THE PART ON A FLAT GAUGE SURFACE.

4) RECOMMENDED PC BOARD THICKNESS IS 1.60 ± 0.10mm.

5) PRODUCT SPECIFICATION PS-87264 APPLIES.

6) PART MATEABLE TO ALL MILLI-GRID HEADERS WITH MATING PIN LENGTH BETWEEN 2.50mm AND 4.20mm

7) PARTS SHALL BE PACKED IN MOISTURE BARRIER BAG.

PART NO. LEGEND

87368 - * * 2 *

CKT SIZE

PLATING
4
5 (SEE NOTE 2)
6

ADD AU FLASH OPTION
EC NO: S2011-1004 2011/06/03
DRWN:SKANG 2011/06/14
CH'KD:ATSEE 2011/06/14
APPR:MLONG
DESCRIPTION
E3
REV

QUALITY SYMBOLS
▼=0
Ⓒ=0

GENERAL TOLERANCES (UNLESS SPECIFIED)

	mm	INCH
4 PLACES	± ---	± ---
3 PLACES	± ---	± ---
2 PLACES	± 0.20	± ---
1 PLACE	± ---	± ---
ANGULAR ± 3 °		

DRAFT WHERE APPLICABLE MUST REMAIN WITHIN DIMENSIONS

DIMENSION STYLE: MM ONLY
SCALE: NTS
DESIGN UNITS: METRIC
THIRD ANGLE PROJECTION

DRAWN BY: JACK DATE: 1992/06/12
CHECKED BY: TAY DATE: 1992/09/24
APPROVED BY: ROY DATE: 1992/09/25

TITLE: MGRID 2MM DUAL ROW SIDE ENTRY RECEPT., SMT

molex MOLEX INCORPORATED

MATERIAL NO.: SEE TABLE
DOCUMENT NO.: SD-87368-**20
SHEET NO.: 1 OF 1
SIZE: A3

THIS DRAWING CONTAINS INFORMATION THAT IS PROPRIETARY TO MOLEX INCORPORATED AND SHOULD NOT BE USED WITHOUT WRITTEN PERMISSION

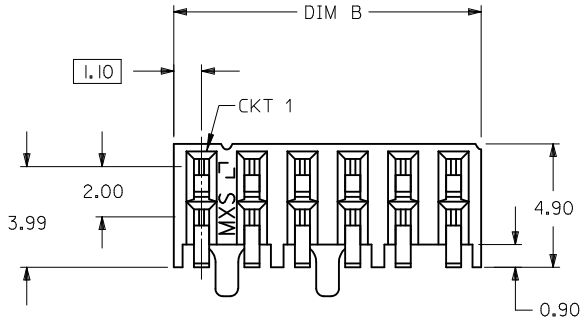

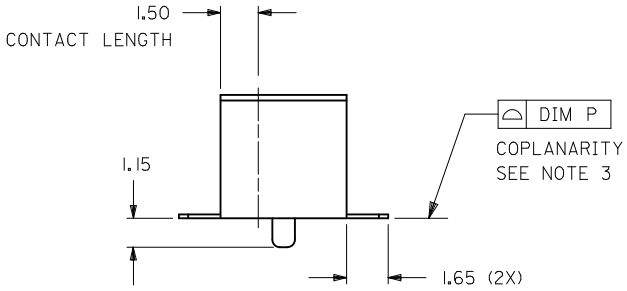

PART NUMBER	CKT. SIZE	DIM A	DIM B	DIM F	DIM P
87368-082*	8	6.00	8.20	4.00	0.10
87368-102*	10	8.00	10.20	4.00	0.10
87368-122*	12	10.00	12.20	4.00	0.13
87368-142*	14	12.00	14.20	6.00	0.13
87368-162*	16	14.00	16.20	8.00	0.13
87368-182*	18	16.00	18.20	10.00	0.13
87368-202*	20	18.00	20.20	12.00	0.13
87368-222*	22	20.00	22.20	14.00	0.13
87368-242*	24	22.00	24.20	16.00	0.15
87368-262*	26	24.00	26.20	18.00	0.15
87368-282*	28	26.00	28.20	20.00	0.15
87368-302*	30	28.00	30.20	22.00	0.15
87368-322*	32	30.00	32.20	24.00	0.15
87368-342*	34	32.00	34.20	26.00	0.15
87368-362*	36	34.00	36.20	28.00	0.15
87368-382*	38	36.00	38.20	30.00	0.15
87368-402*	40	38.00	40.20	32.00	0.15
87368-422*	42	40.00	42.20	34.00	0.15
87368-442*	44	42.00	44.20	36.00	0.15
87368-462*	46	44.00	46.20	38.00	0.15
87368-482*	48	46.00	48.20	40.00	0.15
87368-502*	50	48.00	50.20	42.00	0.15

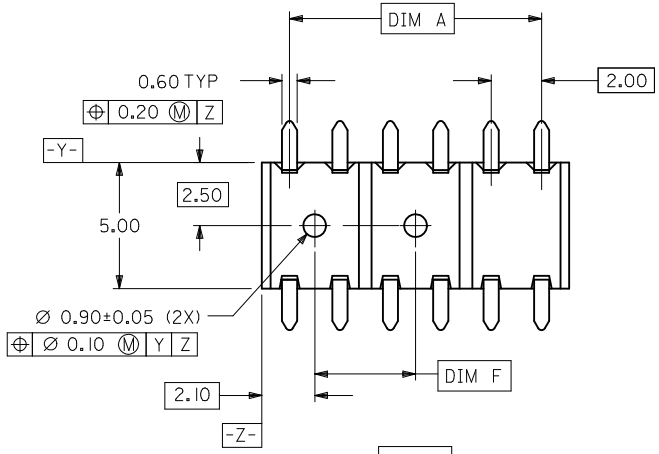

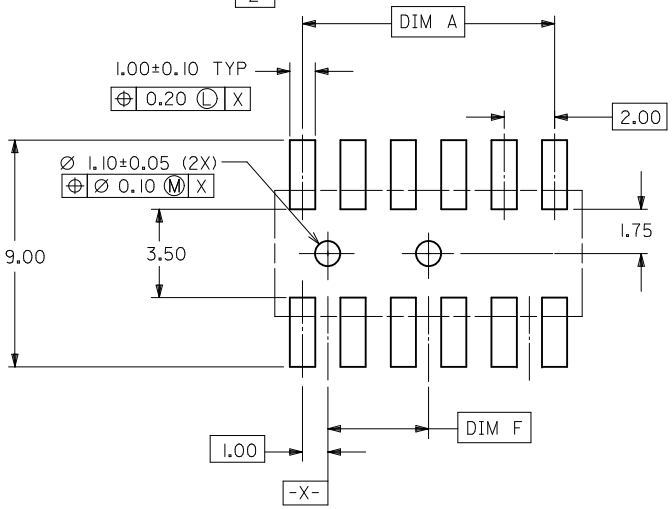

RECOMMENDED P.C. BOARD LAYOUT

NOTE:

1) 12 CIRCUIT SIZE SHOWN FOR ILLUSTRATION ONLY. SEE CHART FOR AVAILABLE PART SIZES.

2) PLATING FINISH:
   - 4 - 0.38um/15uin MIN. GOLD IN CONTACT AREA
     2.54um/100uin MIN. TIN IN SOLDER TAIL AREA
     BOTH OVER 1.27um/50uin MIN. NICKEL OVERALL
   - 5 - 0.76um/30uin MIN. GOLD IN CONTACT AREA
     2.54um/100uin MIN. TIN IN SOLDER TAIL AREA
     BOTH OVER 1.27um/50uin MIN. NICKEL OVERALL
   - 6 - 0.05 TO 0.25um (2 TO 10uin) GOLD IN CONTACT AREA
     2.54um/100uin MIN. TIN IN SOLDER TAIL AREA
     BOTH OVER 1.27um/50uin MIN. NICKEL OVERALL

3) COPLANARITY OF SOLDER TAIL IS TO BE MEASURED BY RESTING THE PART ON A FLAT GAUGE SURFACE.

4) RECOMMENDED PC BOARD THICKNESS IS 1.60 ± 0.10mm.

5) PRODUCT SPECIFICATION PS-87264 APPLIES.

6) PART MATEABLE TO ALL MILLI-GRID HEADERS WITH MATING PIN LENGTH BETWEEN 2.50mm AND 4.20mm

7) PARTS SHALL BE PACKED IN MOISTURE BARRIER BAG.

PART NO. LEGEND

87368 - * * 2 *

CKT SIZE

PLATING
4
5 (SEE NOTE 2)
6

ADD AU FLASH OPTION
EC NO: S2011-1004 2011/06/03
DRWN:SKANG 2011/06/14
CH'KD:ATSEE 2011/06/14
APPR:MLONG
DESCRIPTION
E3
REV

QUALITY SYMBOLS
▼=0
Ⓒ=0

GENERAL TOLERANCES (UNLESS SPECIFIED)

	mm	INCH
4 PLACES	± ---	± ---
3 PLACES	± ---	± ---
2 PLACES	± 0.20	± ---
1 PLACE	± ---	± ---
ANGULAR ± 3 °		

DRAFT WHERE APPLICABLE MUST REMAIN WITHIN DIMENSIONS

DIMENSION STYLE: MM ONLY
SCALE: NTS
DESIGN UNITS: METRIC
THIRD ANGLE PROJECTION

DRAWN BY: JACK DATE: 1992/06/12
CHECKED BY: TAY DATE: 1992/09/24
APPROVED BY: ROY DATE: 1992/09/25

TITLE: MGRID 2MM DUAL ROW SIDE ENTRY RECEPT., SMT

molex MOLEX INCORPORATED

MATERIAL NO.: SEE TABLE
DOCUMENT NO.: SD-87368-**20
SHEET NO.: 1 OF 1
SIZE: A3

THIS DRAWING CONTAINS INFORMATION THAT IS PROPRIETARY TO MOLEX INCORPORATED AND SHOULD NOT BE USED WITHOUT WRITTEN PERMISSION