NOTES:
1. MATERIALS:
   HOUSING: LCP, GLASS FILLED, UL94V-0, BLACK
   TERMINAL: COPPER ALLOY
2. FINISHES: 2.50µM TIN OVER 1.25µM NICKEL UNDERPLATE
3. PRODUCT SPECIFICATION: PS-78787-001
4. PACKAGING SPECIFICATION: PK-78787-001
5. MATES WITH: 87758, 87759, 87760, 87831, 87832, 87833
6. MOLEX LOGO AND CAVITY ID IS LOCATED APPROXIMATELY AS SHOWN
7. FOR ILLUSTRATION, 8 CIRCUITS IS SHOWN
8. CIRCUIT NUMBERS ARE COUNTED FROM LEFT TO RIGHT ON TOP VIEW (GATE RECESS ON THE RIGHT AS SHOWN)
9. SEE SHEET 2 FOR CIRCUIT SIZE PART NUMBER & DIMENSIONS

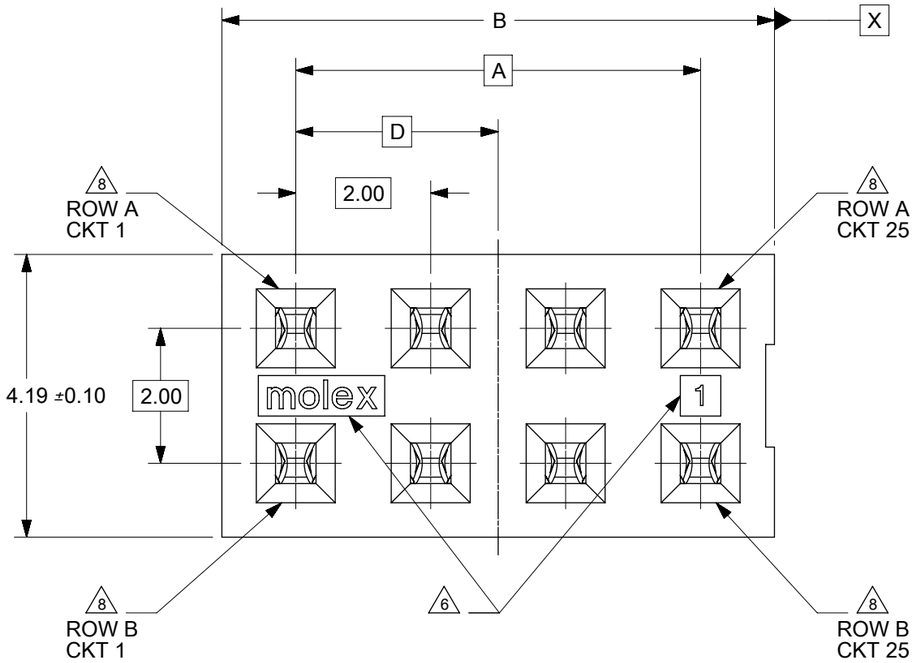


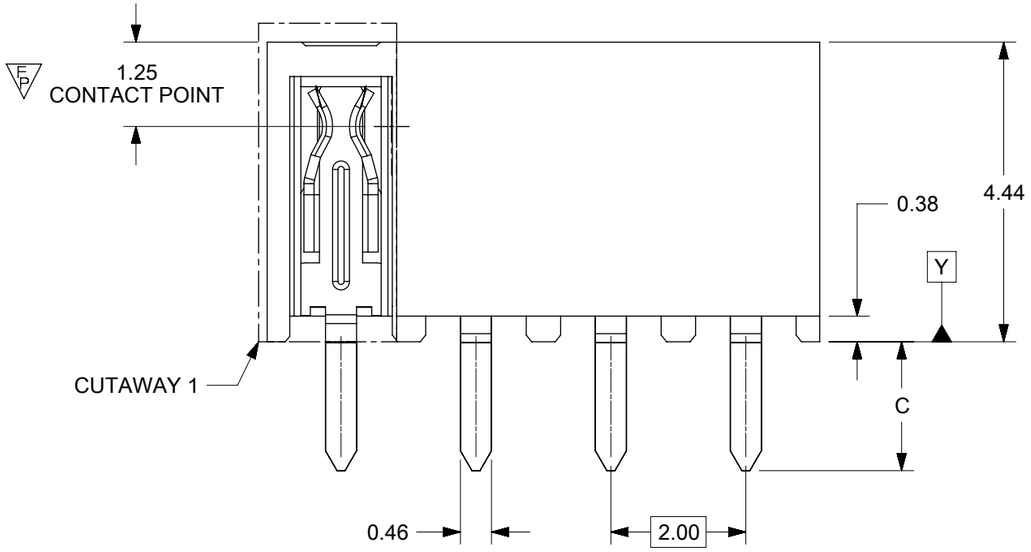


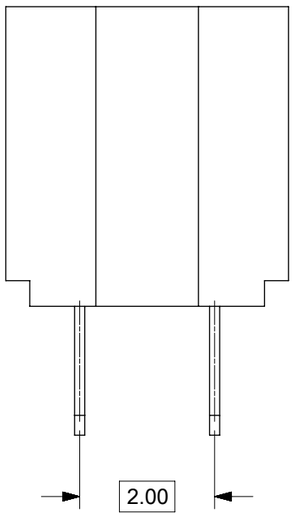


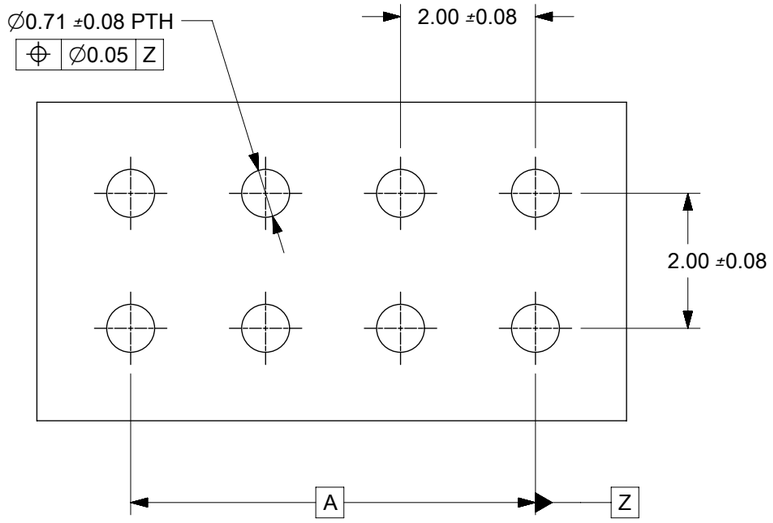


RECOMMENDED PCB LAYOUT

THIS DRAWING CONTAINS INFORMATION THAT IS PROPRIETARY TO MOLEX ELECTRONIC TECHNOLOGIES, LLC AND SHOULD NOT BE USED WITHOUT WRITTEN PERMISSION

| DIMENSION UNITS | SCALE |
|---|---|
| mm | NTS |

GENERAL TOLERANCES (UNLESS SPECIFIED)

| | MM | INCH |
|---|---|---|
| 4 PLACES | ± | ± |
| 3 PLACES | ± | ± |
| 2 PLACES | ± 0.25 | ± |
| 1 PLACE | ± | ± |
| 0 PLACES | ± | ± |
| ANGULAR TOL | ± 0.5 ° | |

DRAFT WHERE APPLICABLE MUST REMAIN WITHIN DIMENSIONS

CURRENT REV DESC: CKT POS CHANGE

EC NO: 173923
DRWN: VLM 2018/03/06
CHK'D: ISHWARG 2018/03/23
APPR: ISHWARG 2018/03/23

INITIAL REVISION:
DRWN: GMENARLY 2012/12/13
APPR: BOKOK 2013/05/30

THIRD ANGLE PROJECTION | DRAWING: A3-SIZE | SERIES: 78787

molex

SALES DRAWING
2MM DUAL ROW TH MILLIGRID VERT RECEPT

PRODUCT CUSTOMER DRAWING

| DOCUMENT NUMBER | DOC TYPE | DOC PART | REVISION |
|---|---|---|---|
| SD-78787-001 | PSD | 001 | A1 |

| MATERIAL NUMBER | CUSTOMER | SHEET NUMBER |
|---|---|---|
| SEE TABLE | GENERAL MARKET | 1 OF 2 |

| DOCUMENT STATUS | P1 | RELEASE DATE | 2018/03/23 06:07:14 |
|---|---|---|---|

FORMAT: Met-lega-master-lb-prod-A3
REVISION: D
DATE: 2018/01/18

| CIRCUIT NUMBER | PART NUMBER | DIM A | DIM B | DIM C | DIM D |
|---|---|---|---|---|---|
| 6 | 78787-0654 | 4 | 6.19 | | 2.00 |
| 8 | 78787-0854 | 6 | 8.19 | | 3.00 |
| 10 | 78787-1054 | 8 | 10.19 | | 4.00 |
| 12 | 78787-1254 | 10 | 12.19 | | 5.00 |
| 14 | 78787-1454 | 12 | 14.19 | | 6.00 |
| 16 | 78787-1654 | 14 | 16.19 | | 7.00 |
| 18 | 78787-1854 | 16 | 18.19 | | 8.00 |
| 20 | 78787-2054 | 18 | 20.19 | | 9.00 |
| 22 | 78787-2254 | 20 | 22.19 | | 10.00 |
| 24 | 78787-2454 | 22 | 24.19 | | 11.00 |
| 26 | 78787-2654 | 24 | 26.19 | | 12.00 |
| 28 | 78787-2854 | 26 | 28.19 | 1.91 | 13.00 |
| 30 | 78787-3054 | 28 | 30.19 | | 14.00 |
| 32 | 78787-3254 | 30 | 32.19 | | 15.00 |
| 34 | 78787-3454 | 32 | 34.19 | | 16.00 |
| 36 | 78787-3654 | 34 | 36.19 | | 17.00 |
| 38 | 78787-3854 | 36 | 38.19 | | 18.00 |
| 40 | 78787-4054 | 38 | 40.19 | | 19.00 |
| 42 | 78787-4254 | 40 | 42.19 | | 20.00 |
| 44 | 78787-4454 | 42 | 44.19 | | 21.00 |
| 46 | 78787-4654 | 44 | 46.19 | | 22.00 |
| 48 | 78787-4854 | 46 | 48.19 | | 23.00 |
| 50 | 78787-5054 | 48 | 50.19 | | 24.00 |

| CIRCUIT NUMBER | PART NUMBER | DIM A | DIM B | DIM C | DIM D |
|---|---|---|---|---|---|
| 6 | 78787-0664 | 4 | 6.19 | | 2.00 |
| 8 | 78787-0864 | 6 | 8.19 | | 3.00 |
| 10 | 78787-1064 | 8 | 10.19 | | 4.00 |
| 12 | 78787-1264 | 10 | 12.19 | | 5.00 |
| 14 | 78787-1464 | 12 | 14.19 | | 6.00 |
| 16 | 78787-1664 | 14 | 16.19 | | 7.00 |
| 18 | 78787-1864 | 16 | 18.19 | | 8.00 |
| 20 | 78787-2064 | 18 | 20.19 | | 9.00 |
| 22 | 78787-2264 | 20 | 22.19 | | 10.00 |
| 24 | 78787-2464 | 22 | 24.19 | | 11.00 |
| 26 | 78787-2664 | 24 | 26.19 | | 12.00 |
| 28 | 78787-2864 | 26 | 28.19 | 3.00 | 13.00 |
| 30 | 78787-3064 | 28 | 30.19 | | 14.00 |
| 32 | 78787-3264 | 30 | 32.19 | | 15.00 |
| 34 | 78787-3464 | 32 | 34.19 | | 16.00 |
| 36 | 78787-3664 | 34 | 36.19 | | 17.00 |
| 38 | 78787-3864 | 36 | 38.19 | | 18.00 |
| 40 | 78787-4064 | 38 | 40.19 | | 19.00 |
| 42 | 78787-4264 | 40 | 42.19 | | 20.00 |
| 44 | 78787-4464 | 42 | 44.19 | | 21.00 |
| 46 | 78787-4664 | 44 | 46.19 | | 22.00 |
| 48 | 78787-4864 | 46 | 48.19 | | 23.00 |
| 50 | 78787-5064 | 48 | 50.19 | | 24.00 |

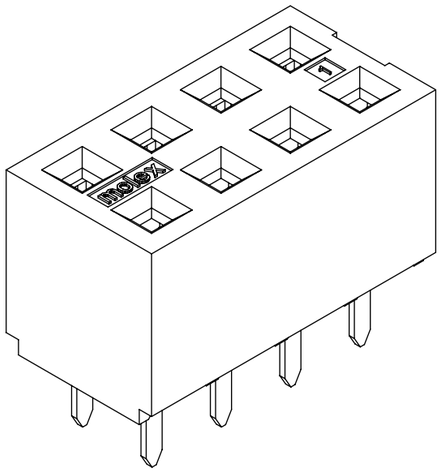

## PART NUMBER LEGEND

78787 - X X X 4

CIRCUIT NUMBER

5. DIM C = 1.91MM
   RECOMMENDED PCB THICKNESS = 0.80MM
6. DIM C = 3.00MM
   RECOMMENDED PCB THICKNESS = 1.60MM

4. WITHOUT CAP IN TUBE

THIS DRAWING CONTAINS INFORMATION THAT IS PROPRIETARY TO MOLEX ELECTRONIC TECHNOLOGIES, LLC AND SHOULD NOT BE USED WITHOUT WRITTEN PERMISSION

| DIMENSION UNITS | SCALE |
|---|---|
| mm | NTS |

GENERAL TOLERANCES (UNLESS SPECIFIED)

| | MM | INCH |
|---|---|---|
| 4 PLACES | ± | ± |
| 3 PLACES | ± | ± |
| 2 PLACES | ± 0.25 | ± |
| 1 PLACE | ± | ± |
| 0 PLACES | ± | ± |
| ANGULAR TOL | ± 0.5 ° | |

DRAFT WHERE APPLICABLE MUST REMAIN WITHIN DIMENSIONS

CURRENT REV DESC: CKT POS CHANGE

EC NO: 173923
DRWN: VLM 2018/03/06
CHK'D: ISHWARG 2018/03/23
APPR: ISHWARG 2018/03/23

INITIAL REVISION:
DRWN: GMENARLY 2012/12/13
APPR: BOKOK 2013/05/30

THIRD ANGLE PROJECTION | DRAWING: A3-SIZE | SERIES: 78787

molex

SALES DRAWING
2MM DUAL ROW TH MILLIGRID VERT RECEPT

PRODUCT CUSTOMER DRAWING

| DOCUMENT NUMBER | DOC TYPE | DOC PART | REVISION |
|---|---|---|---|
| SD-78787-001 | PSD | 001 | A1 |

| MATERIAL NUMBER | CUSTOMER | SHEET NUMBER |
|---|---|---|
| SEE TABLE | GENERAL MARKET | 2 OF 2 |

| DOCUMENT STATUS | P1 | RELEASE DATE | 2018/03/23 06:07:14 |
|---|---|---|---|

FORMAT: Met-lega-master-tb-prod-A3
REVISION: D
DATE: 2018/01/18